ASSEMBLY INSTRUCTION

BRENNAN

BOUBLE BED

78689

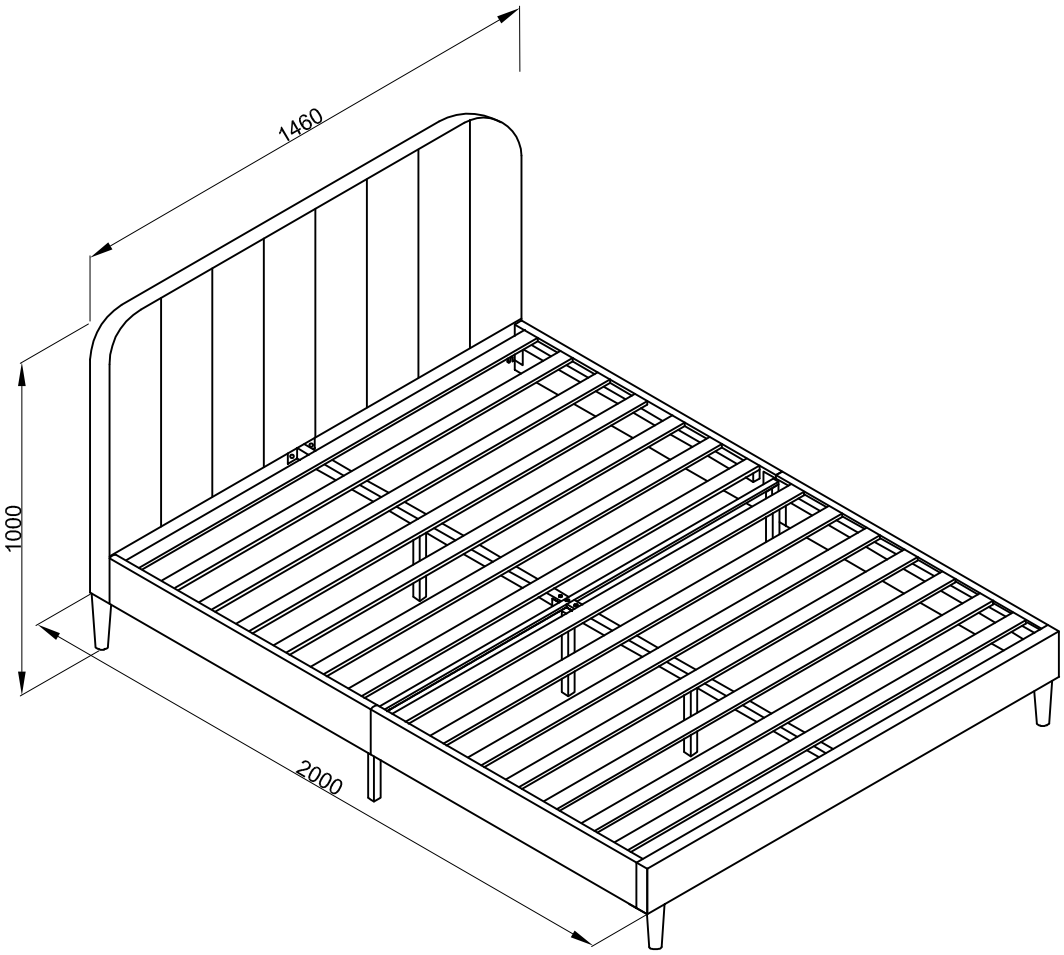

Imported by JWA Furniture Pty Ltd, Qld, Brisbane Australia.
For any assistance with assembly or for missing parts please refer to your receipt

PRE-ASSEMBLY PREPARATION

Before You start:

1.Choose a clean, level, spacious assembly area. Avoid hard surfaces that may damage the product
2.Take care when lifting. Product should be assembled as near as possible to the point of use
3.Ensure that you have all required contents for complete assembly
4.Always read the assembly instructions carefully before beginning assembly.
5.Keep all hardware parts and packaging out of reach of small children.
6.Do not over tighten the screws and bolts as this may damage the threads
7.Assembly is to be carried out by a competent adult(s) ONLY
8.During assembly, children should be kept away from the product due to possible risk to injury.
9.Do not use this item if any components are missing or damaged.
10.Please keep the instructions for future reference.

	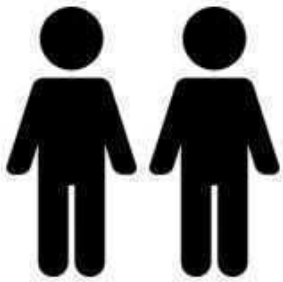
Allow 40 min	For 2 people

PARTS LIST

#A Bolt M8 x 30MM x 18pcs	#B Bolt M8 x 50MM x 1pc	#C Bolt M6 x 15MM x 8pcs	#D Flat Washer M8 x 19MM x 19pcs	#E Flat Washer M6 x 16MM x 8pcs
#F Lock Washer M8 x 19pcs	#G Allen Wrench M4 x 1pc	#H Allen Wrench M5 x 1pc		

1	Head Board x 1pc	7	Center Cross Bar x 1pc
2	Side Rail (L&R) x 4pcs	8	Centre Support Leg x 2pcs
3	Foot Board x 1pc	9	Centre Support Leg x1pc
4	HB/FB leg x 4pcs	10	Centre Support Rail x 2pcs
5	Side Rail Support Leg x 2pcs		
6	Slat x 14pcs		

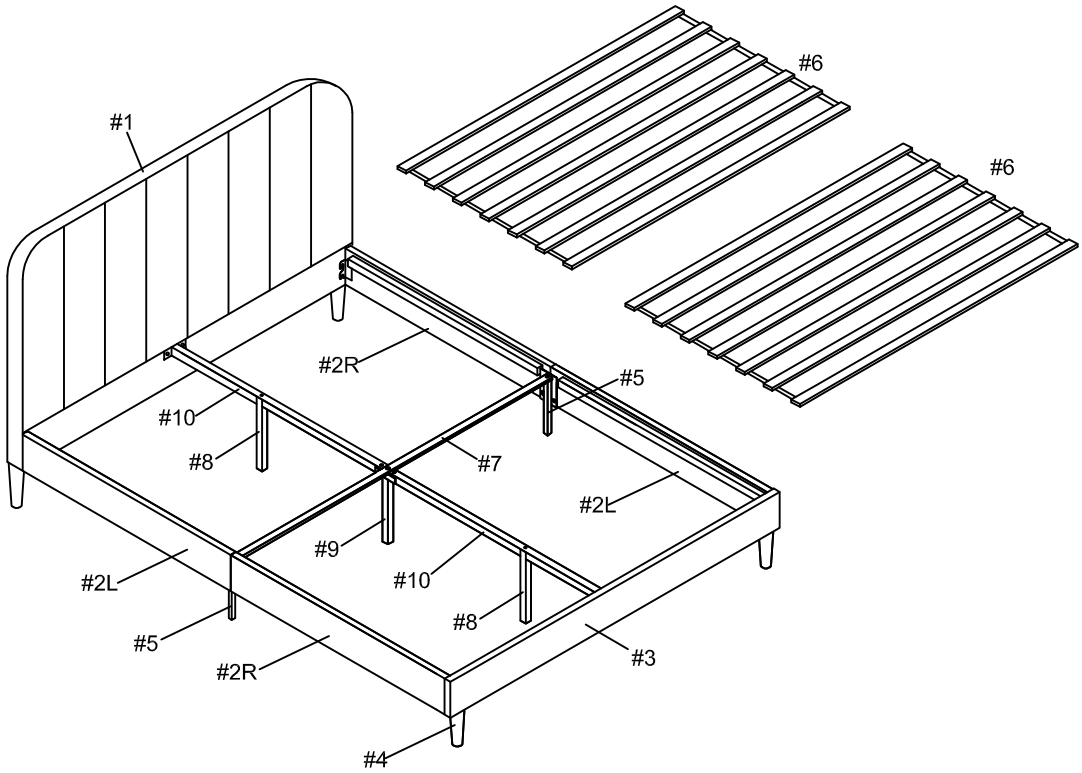

STEP 1:

- Prepare a protected surface with a blanket or cardboard.
- Attach 2x HB/FB Legs(4) to the 1x Head Board(1) and 2x HB/FB Legs(4) to the 1x Foot Board(3), as shown below.

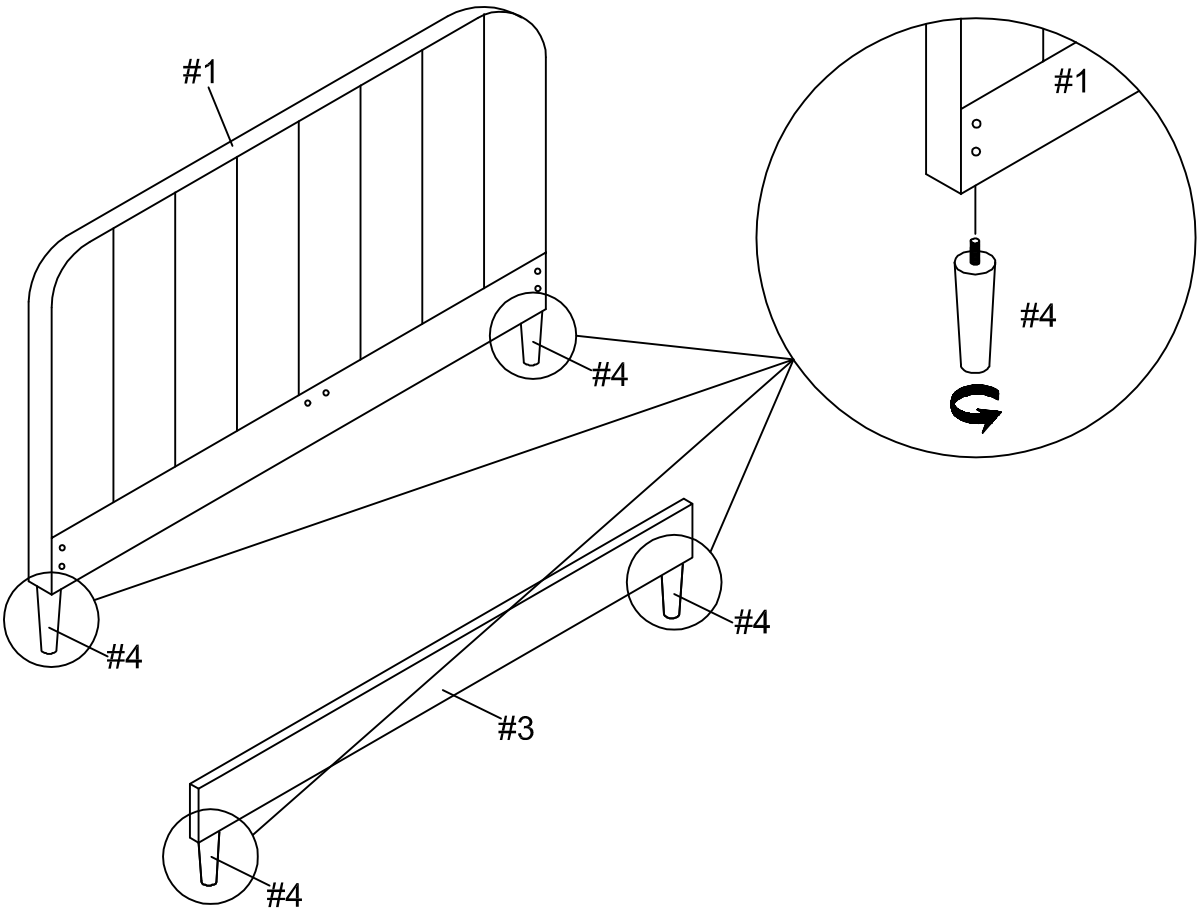

STEP 2:

- Attach the 2x Side Rails Support Legs(5) to the 4x Left and Right Siderails(2), as shown below. Use 4x bolt(C) and 4x Flat Washer(E) per leg, threaded from the top. Fasten with allen key(G). Ensure the connection is tig

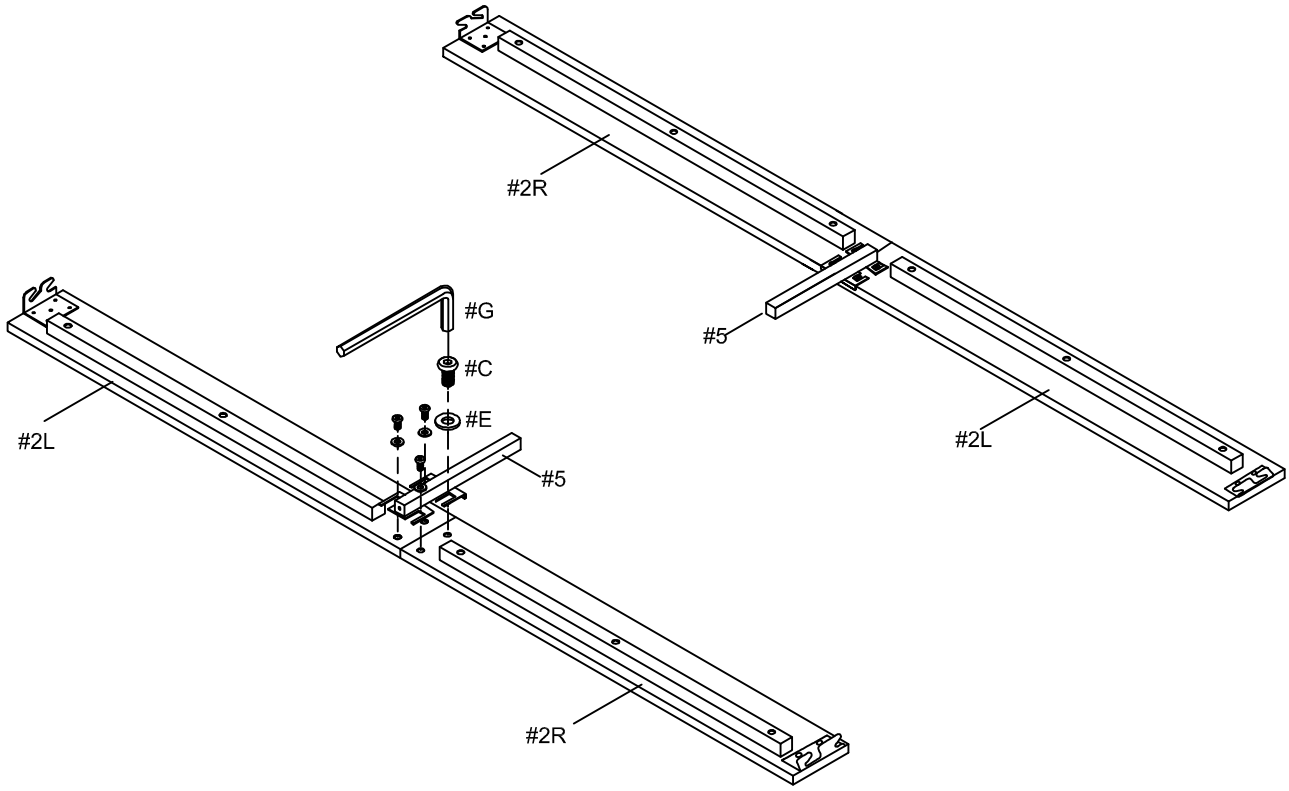

STEP 3:

- Connect a side rail to the Head Board and Foot Board. Secure with 2x bolt(A) and 2x Lock Washer(F) & 2x Flat Washer(D) per corner. Fasten with allen key(H).
- Repeat for the other side rail.

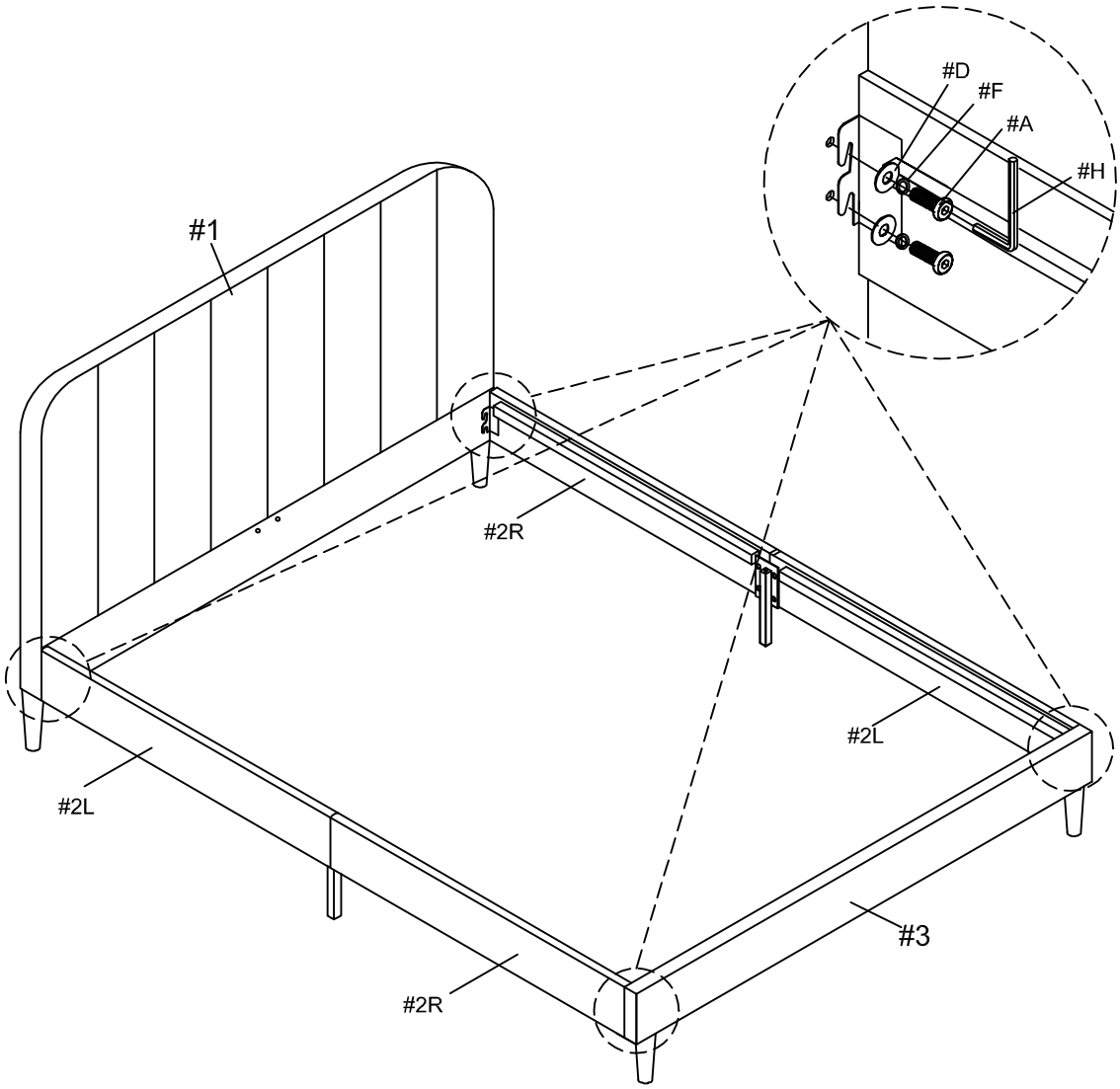

STEP 4:

- Attach the Center support leg(9) to the 2x Centre Support Rail(10), as shown below. Use 2x bolt(A) with 2x Lock Washer(F) & 2x Flat Washer(D). Fasten with allen key(H).
- Attach the 2x supports(8) to the Centre Support Rail(10), as shown below. Use bolt(A) with Lock Washer(F) & Flat Washer(D) per leg, threaded from the top. Fasten with allen key(H).

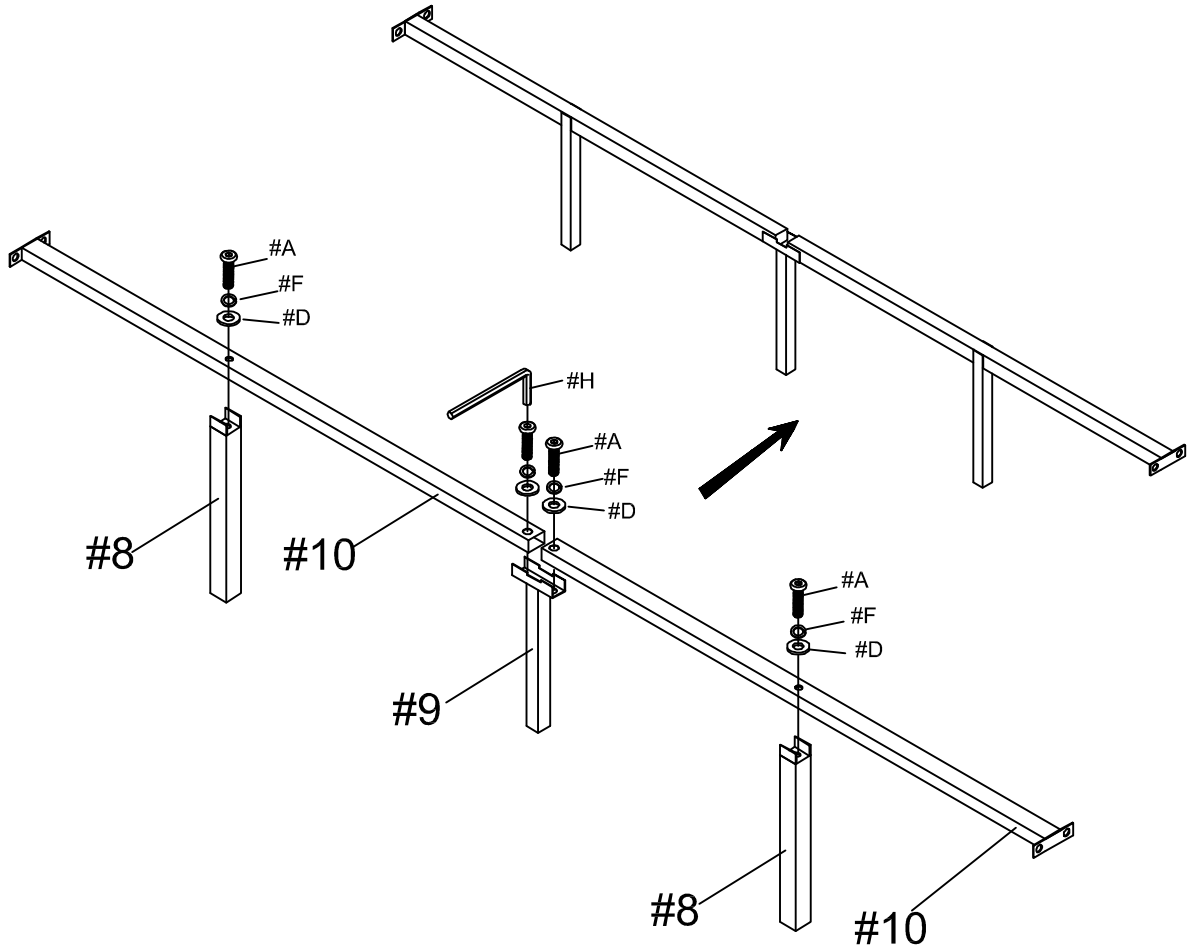

STEP 5:

- Attach the Centre Support Rail(10) to the Head Board(1) and the Foot Board(3), as shown as below. Thread bolt(A) with Lock Washer(F) & Flat Washer(D) from the top into the holes at the middle of the Head Board and Foot Board. Fasten with allen key(H).

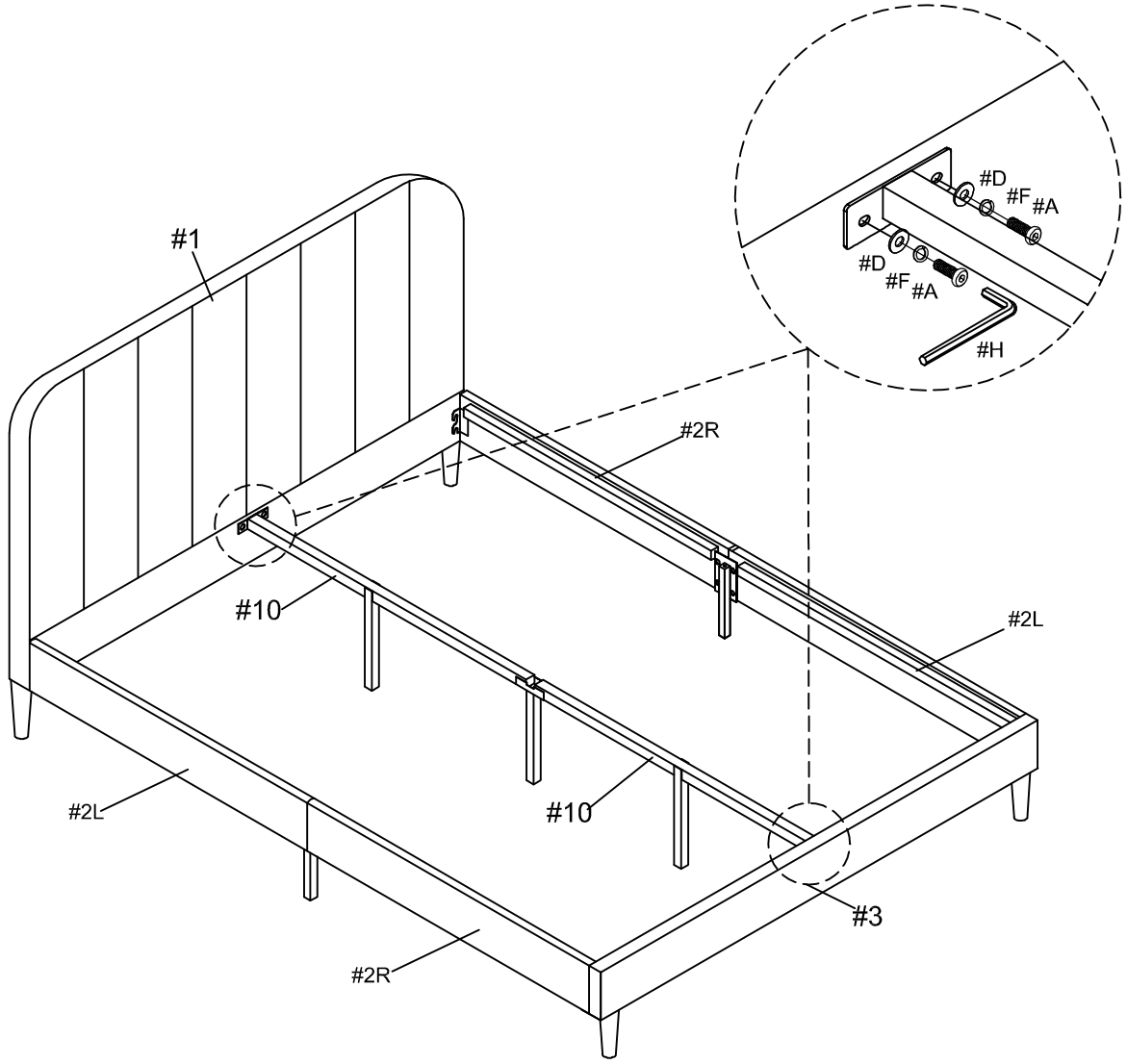

STEP 6:

- Attach the Center Cross Bar(7) to the Centre Support Rail(10) on the middle, as shown below. Use 1x bolt(B) with Lock Washer(F) & Flat Washer(D). Fasten with allen key(H).
- Attach either end of the center cross bar(7) to the side rails (2). Use 2x bolt(A) with 2x Lock Washer(F) & 2x Flat WasherD). Fasten with allen key(H).

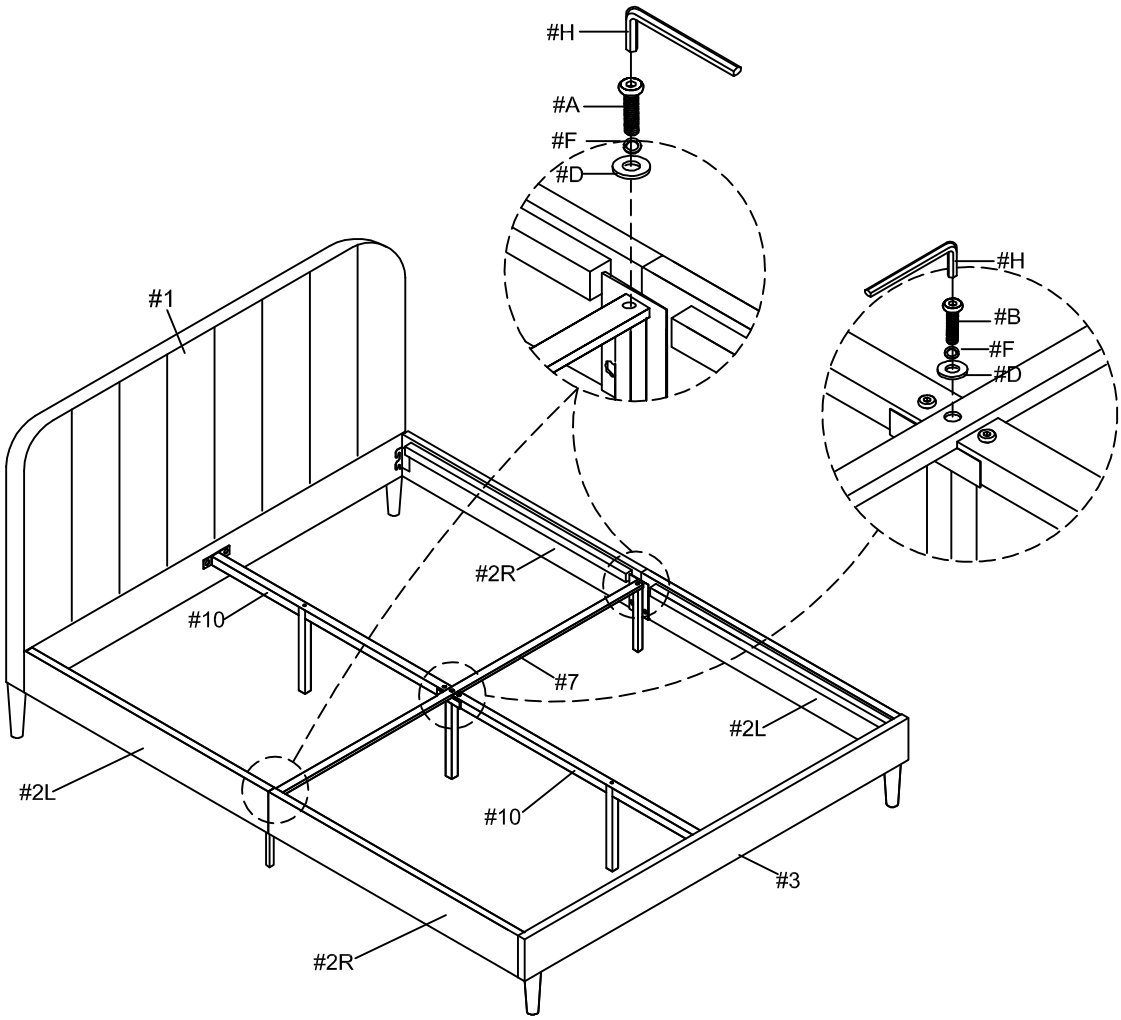

STEP 7:

- Flatten the 14x slats (6) on the bed frame. Assembly is finished

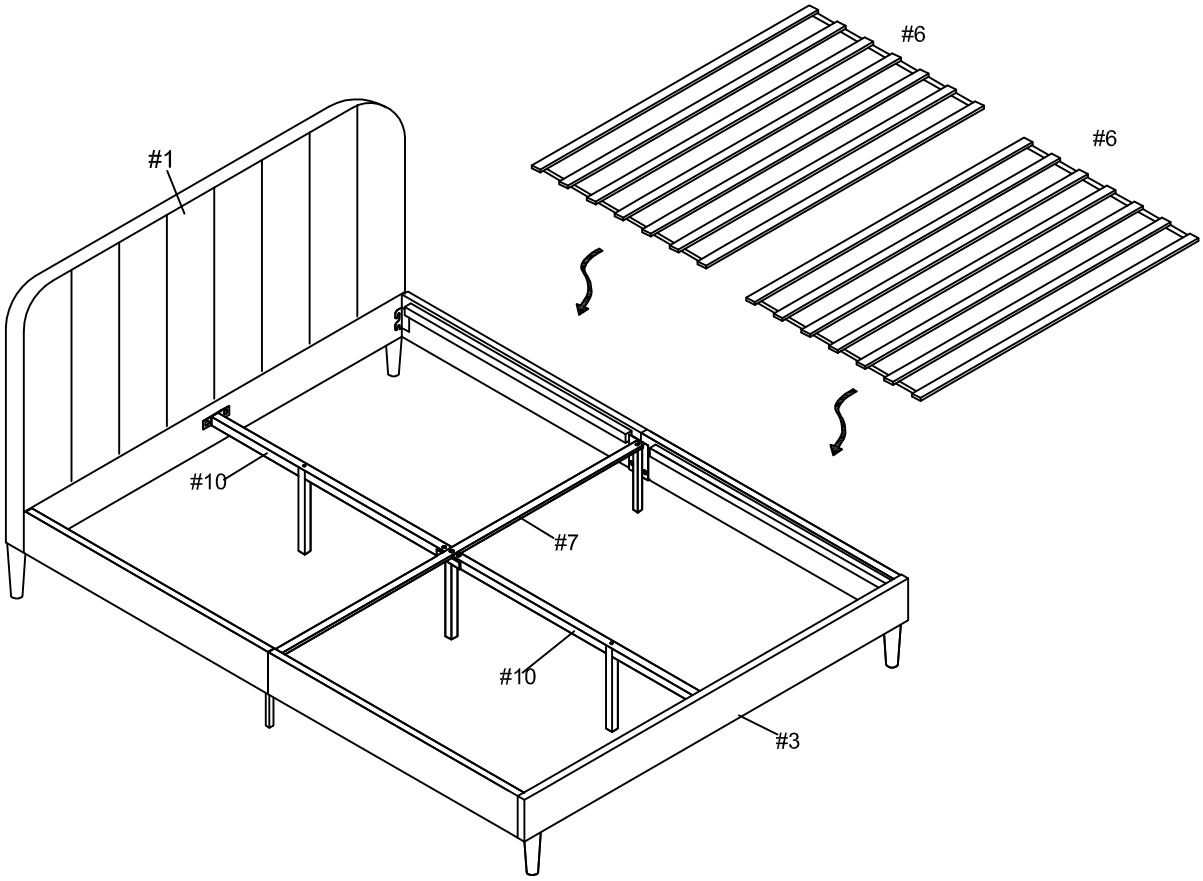

Assembly Is Complete

CAUTION
ALWAYS LIFT YOUR BED WHEN MOVING/RELOCATING – DO NOT DRAG.DRAGGING CAN CAUSE THE CENTRE SUPPORT LEGS TO BEND/BREAK

PRODUCT CARE:

FURNITURE / BED

1. **When assembling your bed please ensure that you have checked the contents for all relevant parts.**

2. **When tightening bolts make sure that they are fully tightened but not forced.**

3. **When moving your fully assembled bed you must first remove the mattress and lift the frame into position, take care when lifting and always have two people handling the bed. PLEASE DO NOT DRAG THE BED as this will cause damage to the rail.**

4. **It is advisable to use approved cleaning products when cleaning the furniture and bed frame as certain chemical based cleaners could have an adverse effect on the bed finish.**